THE HOME OF INNOVATION.

Eltako

CONTROLLING INRUSH CURRENTS

LED lamps are a welcome alternative to energy-saving bulbs, especially as a retrofit variant. However, the downside is that not every incandescent bulb can be simply replaced by a retrofit LED lamp. In most cases, the high inrush current of LEDs can lead to massive disturbances in the electrical installation – it may even cause contact wear or trigger circuit breakers.

Our ESW12DX-UC impulse switch with 500A/2 ms tungsten pre-contact mitigates high inrush currents. This protects the contacts of switching devices and significantly increases the service life of the entire system.

ESW12DX-UC

www.eltako.com

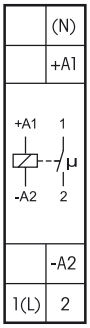

ESW12DX-UC

1 NO contact potential free 16 A/250 V AC with tungsten pre-contact. 230 V LED lamps up to 600 W, incandescent lamp load up to 3300 W. Max. inrush current 500 A/2 ms. No standby loss.

Modular device for DIN-EN 60715 TH35 rail mounting.
1 module = 18 mm wide, 58 mm deep.
State-of-the-art hybrid technology combines advantages of nonwearing electronic control with high capacity of special relays.
With the patented Eltako Duplex technology (DX) the normally potential-free contacts can still switch in zero passage when switching 230 V AC 50 Hz and therefore drastically reduce wear. Simply connect the neutral conductor to the terminal (N) and L to 1(L) for this. This gives a standby consumption of only 0.1 Watt.
Universal control voltage 8 to 230 V UC.
Low switching noise.
No permanent power supply necessary, therefore no standby loss.
By using a bistable relay coil power loss and heating are avoided even in the on mode.
The relay contact can be open or closed during start-up. It is synchronised at first operation.

The electronics does not have an internal power supply and therefore no power is consumed in any contact position. A control current flows only during a short control impulse of 0.2 seconds. This activates the microcontroller, reads the last switching state from the non-voltage memory, switches the bistable relay to its opposite state accordingly and rewrites the new switching state to memory.

ESW12DX-UC	1 NO contact 16 A	EAN 4010312206744	**46,60 €/pc.**

Typical connections
with zero passage switching

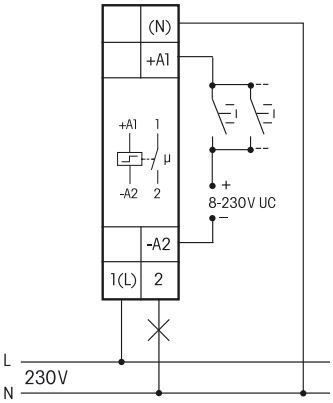

without zero passage switching

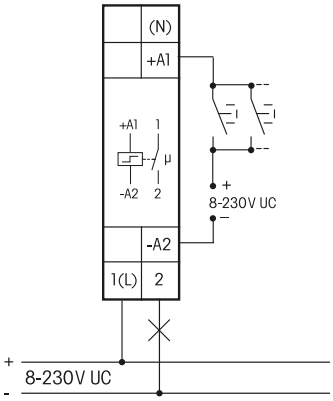

Technical data page 11-15.
Housing for operating instructions GBA14, see Accessories, chapter Z.

Eltako GmbH
Hofener Straße 54
D-70736 Fellbach
+49 711 943 500 00
eltako.com

Technical support:
+49 711 943 500 25 technical-support@eltako.de

Commercial support:
+49 711 943 500 00 export@eltako.de