Typical connection
4-wire-connection 3x230/400 V

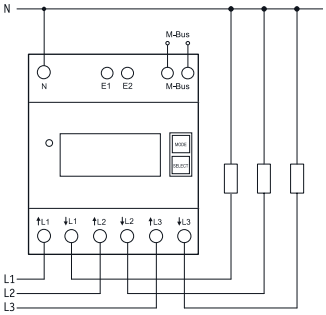

Manuals and documents in further languages:
https://eltako.com/redirect/DSZ15DM-3*80A_MID

Technical data page 10-28.

DSZ15DM-3x80A MID

MID

M-bus three-phase energy meter.
Maximum current 3x80 A. Standby loss 0.5 watt per path only.

Modular device for DIN-EN 60715 TH35 rail mounting.
4 modules = 70 mm wide and 58 mm deep.
Accuracy class B (1%). With M-bus interface.
It measures active energy by means of the current between input and output.
The internal power consumption of 0.5 watt active power per path is neither metered nor indicated.
1, 2 or 3 phase conductors with max. currents up to 80 A can be connected.
The inrush current is 40 mA.
The N terminal must always be connected.
The 7 segment LC display is also legible twice within a period of 2 weeks without power supply.
Power consumption is indicated by an LED flashing at a rate of 1000 times per KWh.
Designed as standard for using as double-tariff meter: Switch over to a second tariff by applying 230 V to terminals E1/E2.
On the right next to the display are the keys MODE and SELECT. Press them to scroll through the menu. First the **background lighting** switches on. The display then shows the total active energy per tariff, the active energy of the resettable memory RS1 or RS2 as well as the instantaneous values of consumption, voltage and current per phase

Error message (false)
When the phase conductor is missing or the current direction is wrong 'false' and the corresponding phase conductor are indicated on the display.

M-bus data transfer
- On read-out all values are transferred in a telegram.
- The following telegrams are supported:
  - Initialisation: SND_NKE — Reply: ACK
  - Read out meter: REQ_UD2 — Reply: RSP_UD
  - Change primary address: SND_UD — Reply: ACK
  - Reset RS1: SND_UD — Reply: ACK
  - Slave selection for the secondary address — Reply: ACK
- The device does not reply to unknown requests
- The transfer rate is detected automatically
- The device has a voltage monitor. In case of voltage loss, all registers are saved in the EEPROM.

Changing the M-bus primary address:
To change the M-bus primary address, hold down SELECT for 3 s. In the menu that appears, press MODE to increment the address by 10. Press SELECT to increment by 1. When the required primary address is set, wait until the main menu reappears.

Secondary address
- It is possible to communicate with the energy meters according to the standard EN13757 using the secondary address.
- The use of wild cards is possible.

For details refer to the operating instructions at www.eltako.com.

DSZ15DM-3x80A MID	M-bus three-phase energy meter, MID approval	**Art. No. 28380512**	**243,70 €/pc.**

Recommended retail prices excluding VAT.