GB

Eltako ELECTRONICS

Wireless antenna switching actuator FAA12-12 V DC

CE

With exchangeable antenna connection 4-channel switching actuator, 4x1 NO contact 4 A/250 V AC, potential free from power supply, with DX technology. Only 0.5 watt standby loss.

Modular device for DIN-EN 50022 rail mounting. 2 modules = 36 mm wide, 58 mm deep.

The wireless antenna switching actuator FAA12 receives and tests all signals from wireless transmitters and repeaters within its receiving range. The signals are evaluated in a 4-channel switching actuator.

To cater for up to 124 additional channels to an RS485 interface (terminals RSA/RSB) can be connected in series wireless switching actuators FSA12 each with 4 channels, wireless switching actuators for shading elements and roller shutters FSB12 each with 2 channels, wireless universal dimmer switches FUD12NPN and wireless 1-10 V controllers FSG12 each with 1 channel.

Each channel can be assigned max. 35 wireless pushbuttons each with 4 functions therefrom in the setting ES one ore more central control pushbuttons.

The FAA12 channels are configured together and switch consumers directly or they can switch conventional switchgear from the Eltako range. Each NO contact has a switching capacity of up to 4 A/250 V AC. Incandescent lamps 1000 watts.

Eltako Duplex technology allows you to switch normally potential free contacts in zero passage switching when 230 V A/C voltage 50 Hz is switched. This drastically reduces wear. To achieve this, simply connect the N conductor to the terminal (N) and L to K (L). This results in an additional standby consumption of only 0.1 watt.

If the channels are used to control switchgear that has no zero passage switching, (N) should not be connected, otherwise the additional off delay would have the opposite effect.

A 12 V DC voltage is supplied from an existing source or from a switching power supply unit WNT12-12 V DC/6 W which has a width of only 1 module. When all 4 relays are switched on, 1.4 watts are required.

Function rotary switches

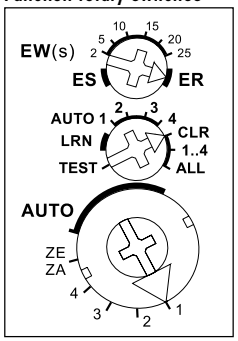

The upper rotary switch defines the function of the 4 channels together as impulse switch (ES), fleeting NO contact (EW) or relay (ER). In ES function, central control commands ON/OFF can be taught-in. In EW function, a wiping time of 2 to 25 seconds can be set.

The middle and the lower rotary switches are for teaching-in the wireless pushbuttons and if necessary the four channels will be tested. In normal mode, the two rotary switches are finally set to AUTO.

If the reception conditions in a distributor are poor, e.g. in switching cabinets or distributors with metal enclosures, **the small antenna supplied as standard** can be replaced by a larger antenna FA250 with magnetic base and 250 cm of cable for connection to the SMA antenna socket.

When **motion detector/brightness sensors FBH** are taught-in, the switching threshold is defined on the last FBH taught-in to switch the lamp on/off depending on the brightness. A off delay of 2 minutes is a fixed setting in the FBH.

When **window/door contacts FTK** are taught-in, different functions can be set with the middle rotary switch in position AUTO 1 to AUTO 4 and linked to maximum 32 FTKs:
AUTO 1 = window closed then output active.
AUTO 2 = window open then output active.
In settings AUTO 3 and AUTO 4 the FTKs taught-in to a single channel are linked automatically. With AUTO 3 all FTKs must be closed so that the N/O contact closes (e.g. for climate control). With AUTO 4 one open FTK is sufficient to close the N/O contact (e.g. for an alarm signal or to switch on the power supply for an extractor hood).

One or several FTKs can be taught-in in several channels to allow several simultaneous functions in each FTK. After a power failure the link is restored by a new signal to the FTK and a signal on the next status message 15 minutes later.

The upper LED on the left shows all perceived wireless commands in the receiving range by short flickering.

The LED below the function rotary switch ES/EW/ER performs during the teach-in process according to the operation manual. It show s wireless control commands by short flickering during operation.

Typical connection

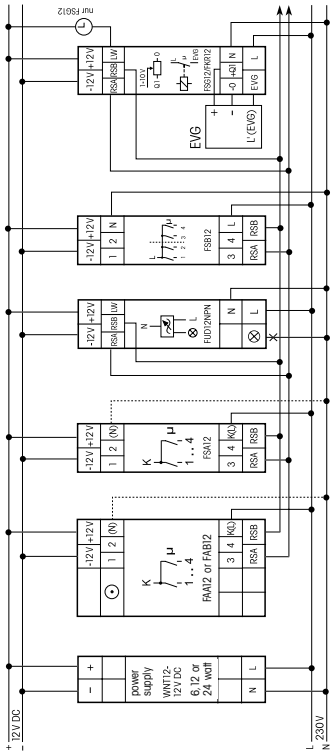

Technical data

Incandescent lamp and halogen lamp load [1] 230 V	up to 1000 W
Standby loss (active power)	0,5 W

[1] Applies to lamps of max. 150 W.

Teaching-in Wireless Sensors in Wireless Actuators

All sensors such as wireless pushbuttons, wireless hand-held transmitters, wireless transmitter modules, wireless window/door contacts, wireless timers and wireless motion detector and brightness sensors must be taught-in in the actuators (receivers with dimmers, switches and relays) so that they can detect and execute commands.

Teaching-in actuator FAA12-12 V DC

The teach-in memory is empty on delivery from the factory. If you are unsure whether the teach-in memory contains something or not, **you must first clear the memory contents completely:**
Set the middle rotary switch to CLR ALL (or to CLR 1..4 if you only want to clear one channel and also set the lower rotary switch to the required channel). The LED flashes at a high rate. Within the next 10 seconds, turn the upper rotary switch three times to the right stop (turn clockwise) and then turn back away from the stop. The LED stops flashing and goes out after 2 seconds. All taught-in sensors or sensors of a channel are cleared.

Clear individual taught-in sensors in the same way as in the teach-in procedure, except that you set the middle rotary switch to CLR instead of LRN, and operate the sensor. The LED previously flashing at a high rate goes out.

Teaching-in sensors

1. Use the lower rotary switch, select the required channel 1 to 4 or the position ZE/ZA for the central control unit.
2. Set the middle rotary switch to LRN. The LED flashes at a low rate.
3. Operate the sensor to be taught-in. The LED goes out. Central control unit pushbuttons are completely taught-in automatically: central OFF is up (0) and central ON is down (I) on the pushbutton. With other pushbuttons, teach-in the upper and lower buttons as required. The central control assigns a complete transmit module, no matter whether it is equipped with a rocker or a double rocker.

To teach-in further sensors, turn the middle rotary switch briefly away from position LRN. Continue the procedure from pos 1.

After teaching-in, set the middle and lower rotary switches to AUTO and turn the function rotary switch to the required position ES, EW 2 to EW 25 or ER. Taught-in central control unit switches are only active in position ES. For taught-in window/door contacts FTK, note that the middle rotary switch must be in the required setting AUTO 1 to 4.

When the middle rotary switch is set to TEST, the 4 contacts can be closed individually using the lower rotary switch:
TEST + AUTO = all contacts open,
TEST + 1 = contact 1 closed,
TEST + 2 = contact 2 closed, etc.

When an actuator is ready for teach-in (the LED flashes at a low rate), the very next incoming signal is taught-in. Therefore, make absolutely sure that you do not activate any other sensors during the teach-in phase.

Important reminder!

This electrical equipment may only be installed by skilled electricians otherwise fire hazard or danger of electric shock exists!